A customizable platform for remotely teaching & learning LVDTs

The relevance of using the IEEE1451.0 Std. to facilitate its design and access

ISEP/CIETI / LABORIS

Ricardo Costa (rjc@isep.ipp.pt)
Samuel Fernandes (samuel54@gmail.com)
Joni Jorge (joni.pin.jor@gmail.com)
Gustavo R. Alves (gca@isep.ipp.pt)

REV2016 - 13th International Conference on Remote Engineering and Virtual Instrumentation
24-26 February 2016, UNED, Madrid, Spain

Index

1- Introduction

Electrical Engineer

Well designed
engineering course curricula
(theoretical and practical_components)

Good
competences

Create, design and innovate !

Practical component is fundamental in engineering courses.
- it should include experimental activities using laboratory infrastructures;
- it is important for teaching and learning analogue transducers (**LVDT sensor!)**.

LVDT

Linear Variable Differential Transformers

A real remotely accessible infrastructure (**remote laboratory**) is a good solution to include LVDT experimental activities in all engineering courses!

A **standard design** of the remote laboratory is important!

2- Teaching & Learning the LVDT sensor

2.1- LVDT overview

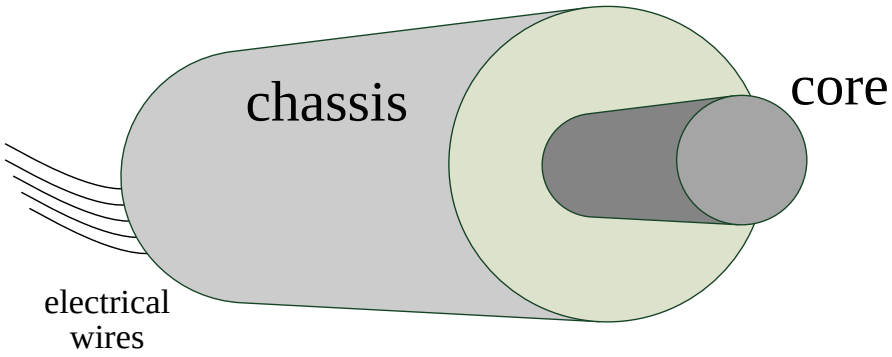

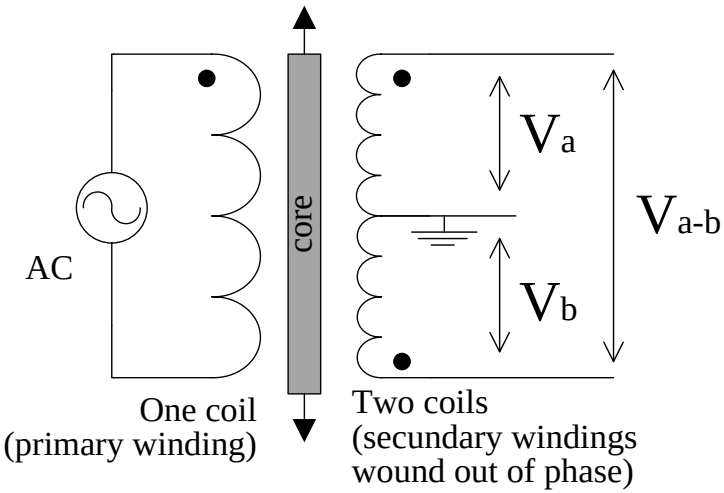

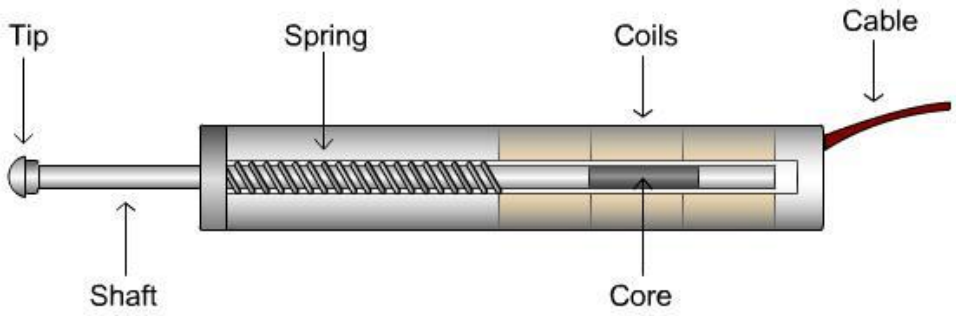

2- Teaching & Learning the LVDT sensor

2.1- LVDT overview

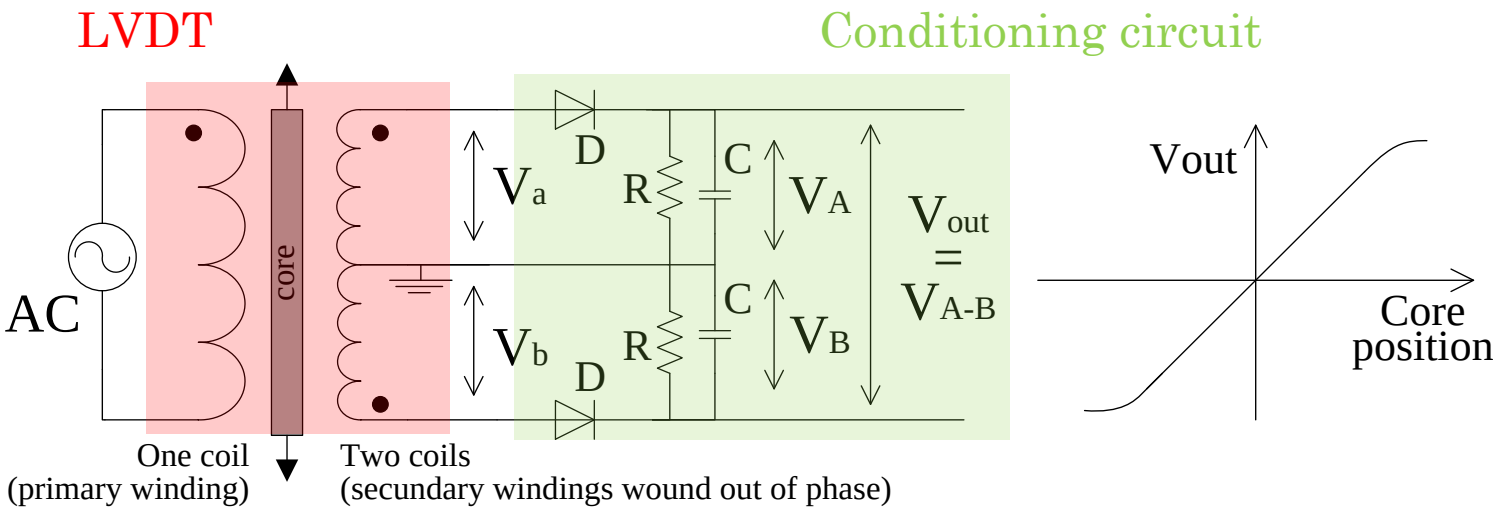

Some characteristics:

- Highly reliable sensors;
- Good accuracy;
- Good Linearity;
- Good sensitivity;
- Infinite resolution;
- Ruggedness (frictionless operation).

Some applications

- Flight control feedback systems;
- Position feedback of servomechanisms;
- Automated measurements in machine tools;
- ….and many other industrial and scientific electromechanical applications

2- Teaching & Learning the LVDT sensor

2.2- Educational considerations

- Engineering schools should provide well-structured curricula with appropriated educational resources to fulfill the learning outcomes;

- The experimental component is required to practice learned theories (specially for teaching and learning analogue sensors, such as the LVDTs);

- LVDTs involve many physical principles very much influenced by the environment conditions, requiring the use of ***real experiments*** (simulations are not sufficient);

- Two possible solutions: traditional or ***remote labs;***

  - Remote labs overcome the lack of resources (laboratories and technical infrastructures) giving a more flexible access to the conduction of real experiments;

  - Remote labs are an important educational technology to the current and future of the education landscape (report published by educational specialists of the New Media Consortium "Horizon Report Europe: 2014 Schools Edition");

- Therefore…

  …it was idealized and designed a ***remotely accessible infrastructure with a customizable platform integrating a LVDT with a basic conditioning circuit***

3- Example of a customizable platform

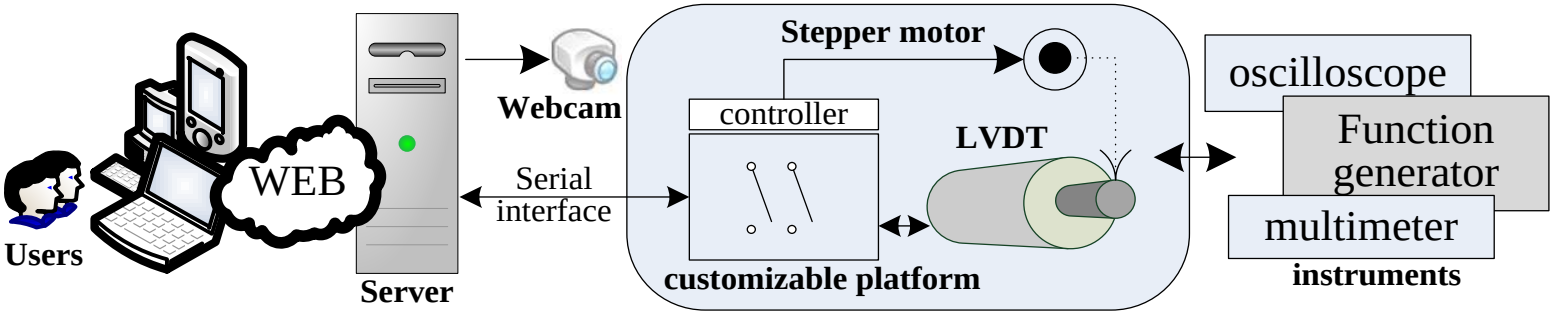

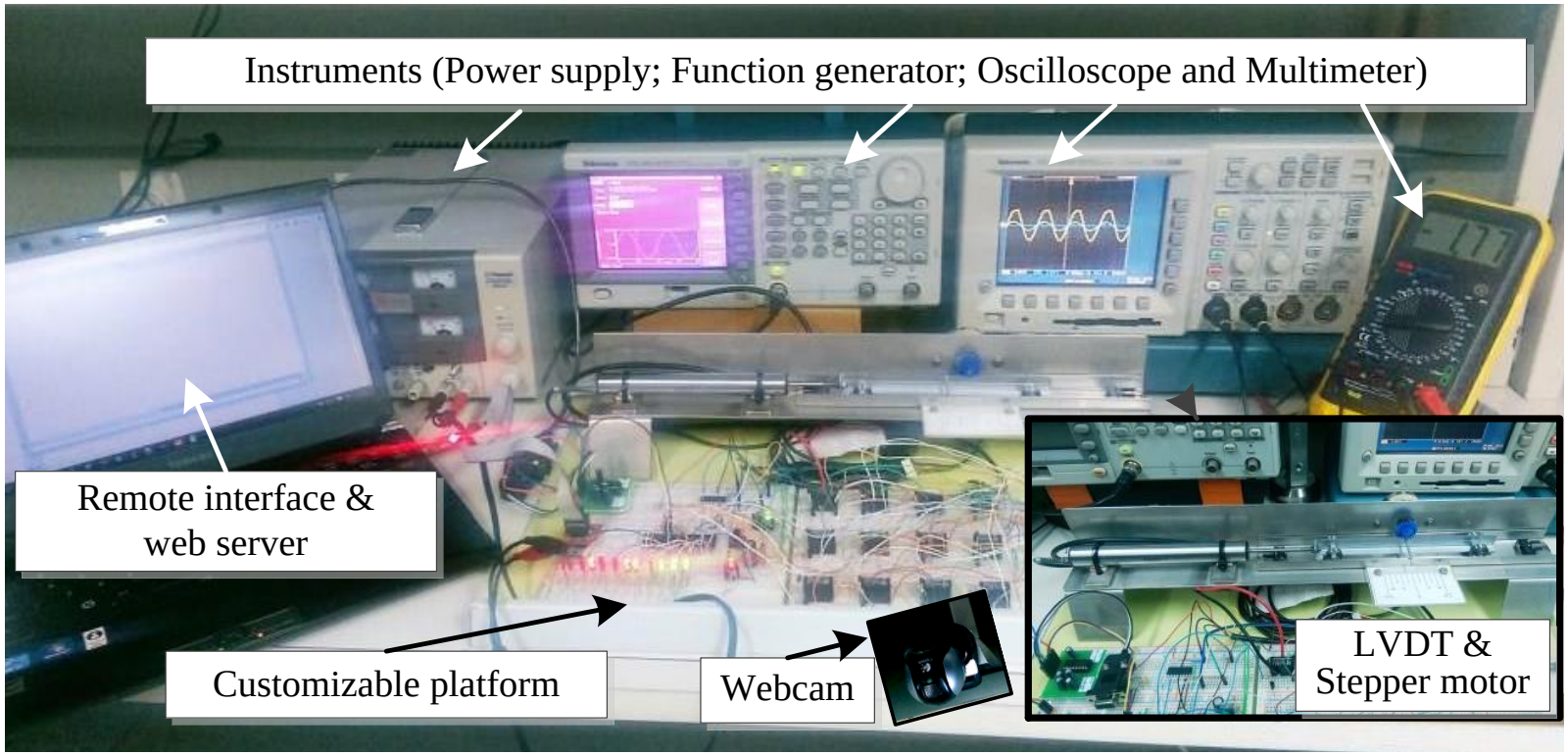

3- Example of a customizable platform

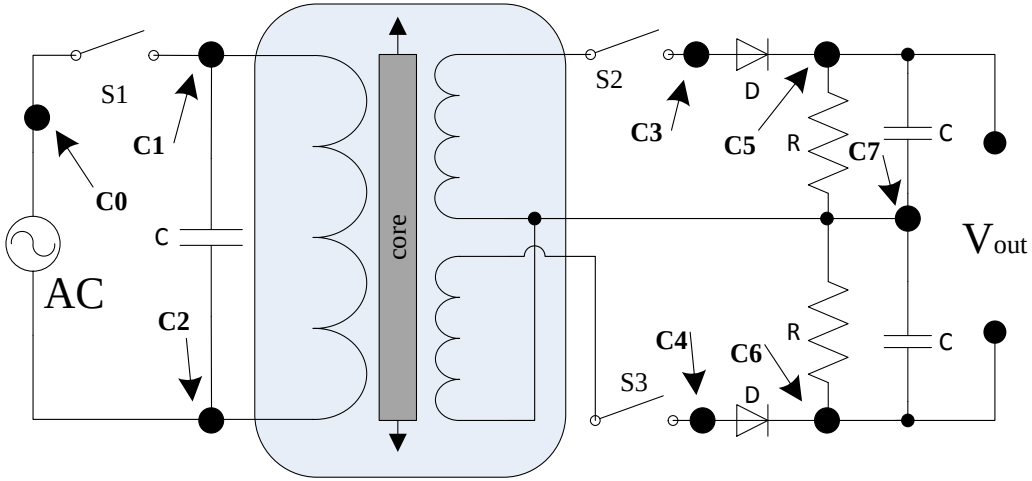

Sx - switch

Cx -connection (represent the nodes able to be attached to an instrument)

R - resistor (10k)

C - capacitor (10µF)

D - diode (1N4148)

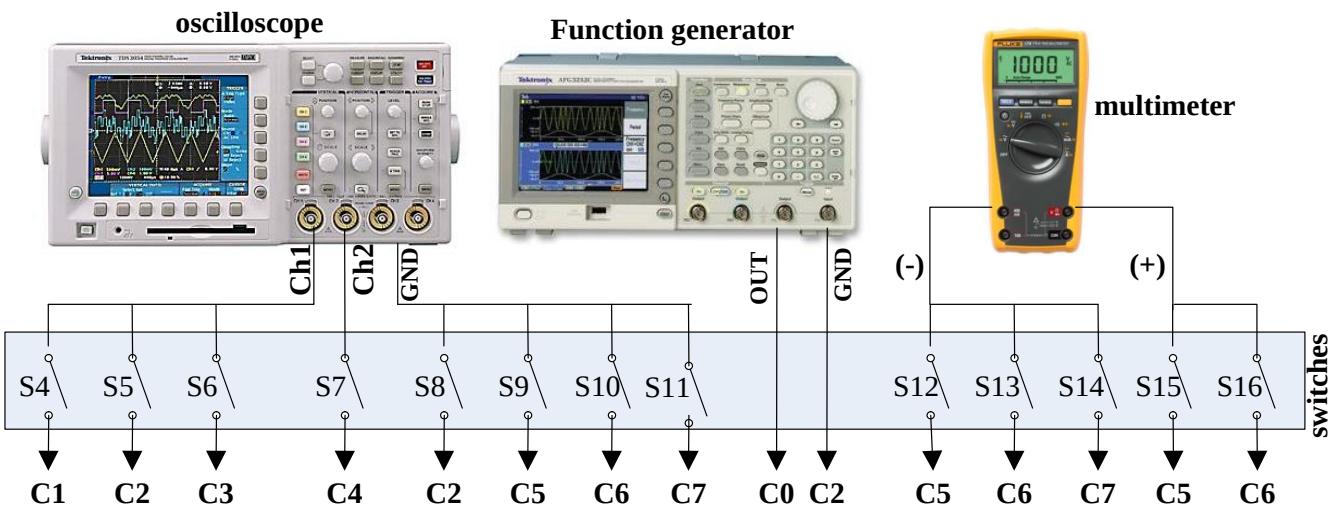

3- Example of a customizable platform

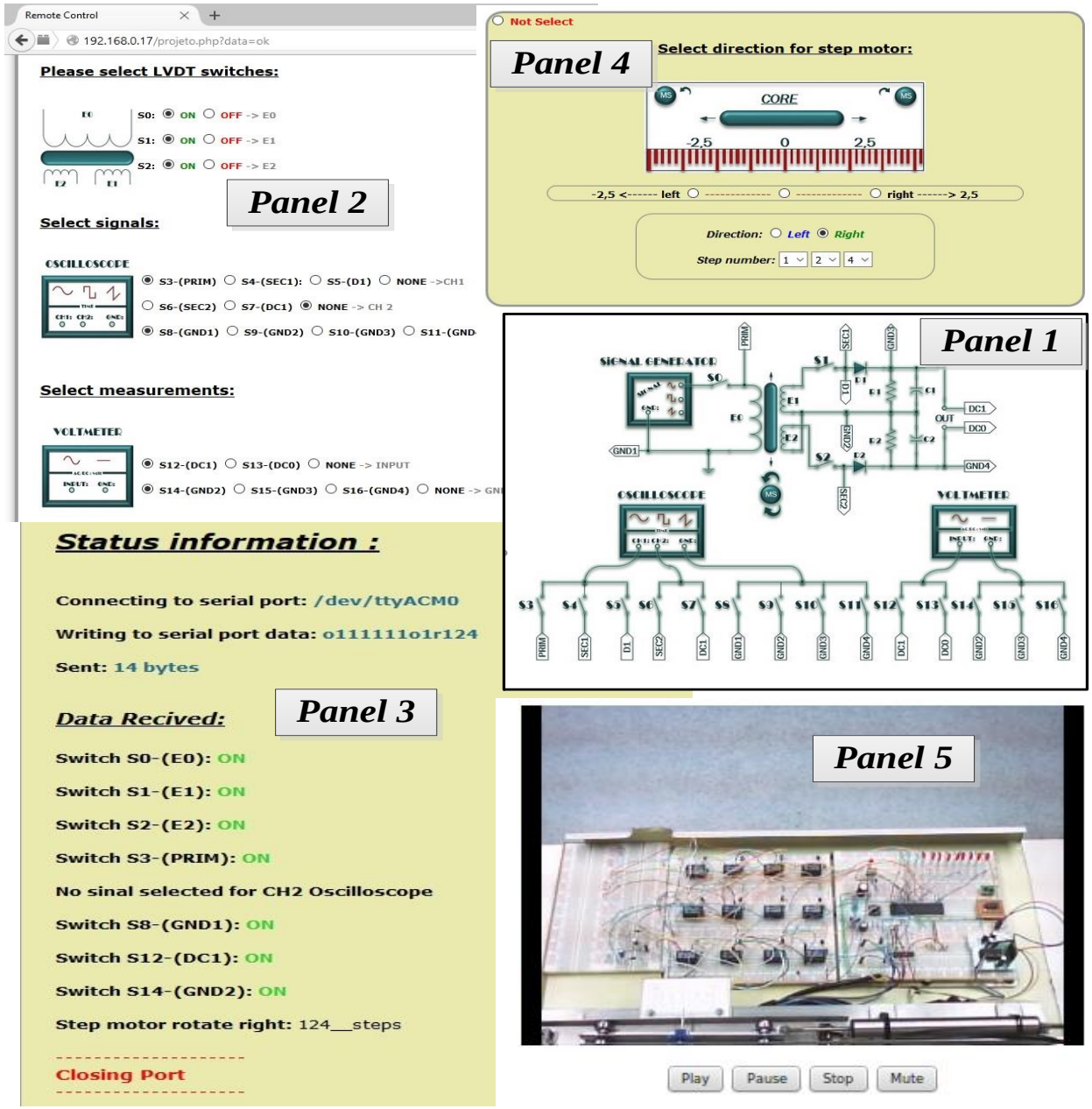

But… it was implemented without any standard approach !

A solution is the adoption of some issues described in the <u>IEEE1451.0 Std.</u>

4- The IEEE1451.0 Std. to design and access the platform

4.1 - Overview of the IEEE1451.0 Std.

- Defined in 2007 and it aims to network transducers (sensors and actuators) using standardized interfaces.

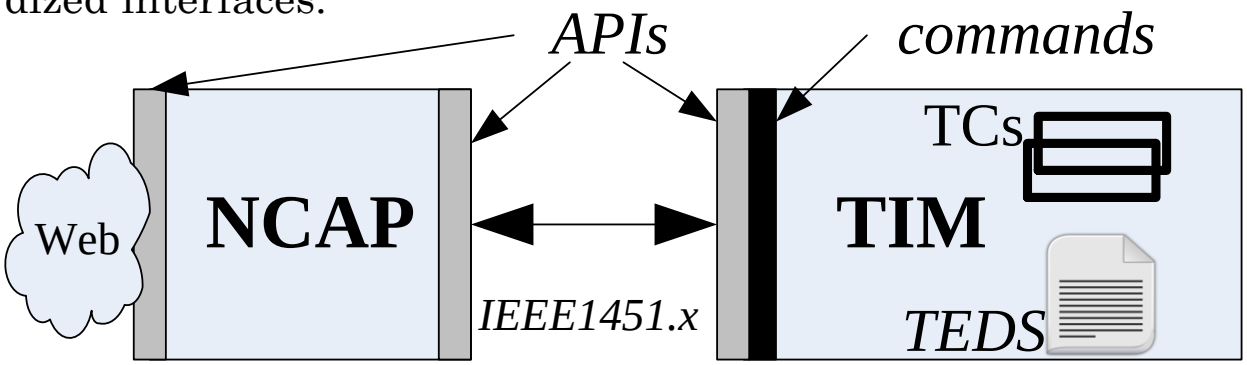

MSB lsb

TC ID (2 octets)	Class (1 octet)	Function (1 octet)	Length (2 octets)	data (variable octets)

command

MSB lsb

Success / fail flag (1 octet)	Length (2 octets)	data (variable octets)

reply

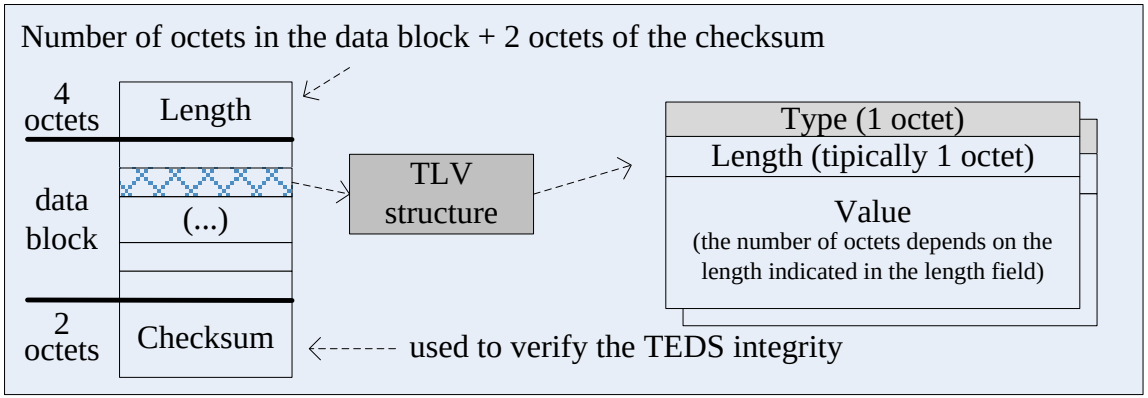

4- The IEEE1451.0 Std. to design and access the platform

4.2 - Considerations for its adoption in the LVDT lab.

- The NCAP:
  - can act as a master implemented in a webserver, since it provides the web interface to enable remote users sending commands to the platform (the TIM);
  - sends commands to the TIM using any type of physical interface, such as the RS-232 or USB serial connections;

- The TIM (is the platform) and it can adopt a TEDS:
  - the fields document and control the entire behavior of the infrastructure and of the associated platform;
  - implemented inside an internal memory able to be updated using the Read/Write TEDS commands.

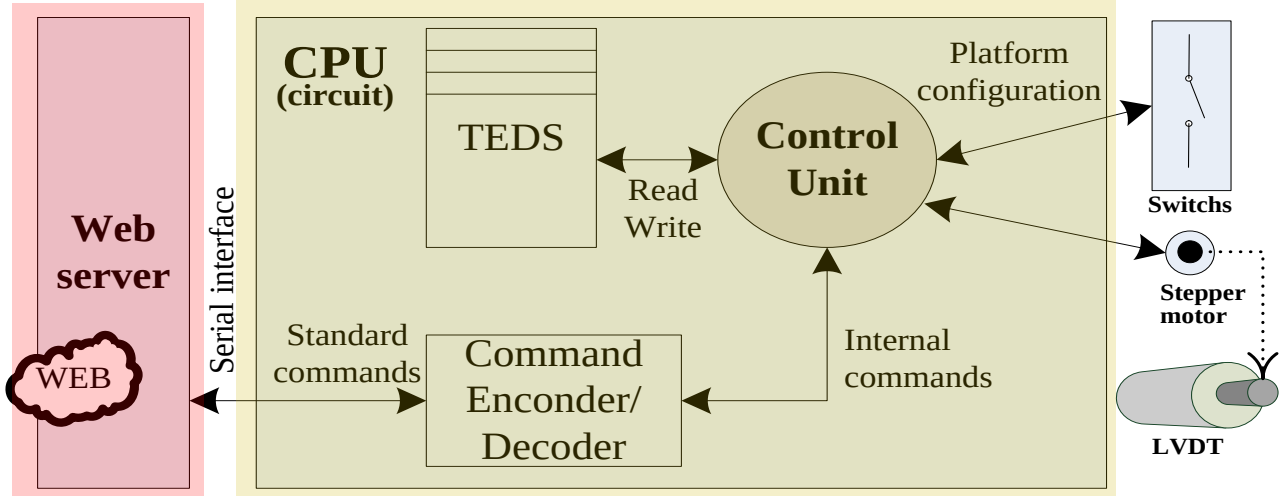

5- Conclusions and perspectives

- **Teaching and learning** analogue transducers is fundamental in electrical engineering (**the LVDT** is one of those transducers that operates as a sensor);
- The use of **remote laboratories** should be considered to teach and learn the LVDT sensor.

- A **remote laboratory** infrastructure to conduct real experiments with a LVDT **was developed**;
- The laboratory was divided in two distinct parts (hardware + software), whose architecture within the CPU was defined from the scratch (it did not follow any standard approach).

- A **solution based on the IEEE1451.0 Std. was considered**;
- The use of a TEDS memory able to access through the standard commands Read/Write TEDS is suggested to implement the described infrastructure and future ones.

- In the future, developments of remote lab infrastructures based on the IEEE1451.0 Std. will be considered !

Thanks for your attention

Ricardo Costa (rjc@isep.ipp.pt)

http://www.dee.isep.ipp.pt/~rjc

POLITÉCNICO DO PORTO

isep Instituto Superior de Engenharia do Porto

CIETI
Centro de Inovação em Engenharia e Tecnologia Industrial

laboris