SIAUT - Sistemas Automóveis

Fuel injection systems (gasoline)

Ricardo Pimenta 1050799
Fábio Daniel 1050357

SIAUT - Sistemas Automóveis

What is a Fuel injection system

Fuel injection is a system for mixing fuel with air in an internal combustion engine.

The functional objectives for fuel injection systems vary but all of them share the central task of **supplying fuel** to the combustion process.

There are several competing objectives such as:

- Power output;
- Fuel efficiency;
- Emissions performance;
- Reliability;
- smooth operation;
- initial cost;
- maintenance cost.

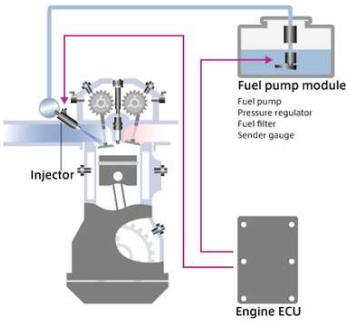

What is a Fuel injection systems

Certain combinations of these goals are conflicting, and it is impractical for a single engine control system to fully optimize all criteria simultaneously.

Automotive engineers strive to best satisfy a customer's needs competitively.

In our days the main objectives are: ***fuel efficiency*** and ***emissions.***

Fuel efficiency

- **Efficiency**

- The Air- Fuel Ratio (AFR) is the mass of air to fuel present during the combustion. The AFR can also be represented by Lambda (λ).
- When this mixture is combined in a balanced way it's called the stoichiometric mixture. This measurement is vey important for anti-pollution and performance tuning reasons. When this mixture is achieved the system has is best performance.
- In our case, which is gasoline systems, the stoichiometric mixture is approximately 14,7 times the mass of air to fuel.

SIAUT - Sistemas Automóveis

Fuel efficiency

- **Efficiency**
- If the mixture as less than 14,7 to 1 is considered a rich mixture.

  If there is less air than this perfect ratio, then there will be fuel left over after combustion because of lack of oxygen, the underburned fuel creates pollution. That's reproduced in a waste of fuel, bad performances.
- But if the mixture as more than 14,7 to 1, that mixture is considered a lean mixture. The fuel will have is space occupied by the large amount of air present. This kind of mixture are bad because tends to produce more nitrogen-oxide pollutants, and, in some cases, it can cause poor performance and even engine damage.

Fuel delivery system

- **The fuel delivery system**

  The fuel delivery system is responsible for fuel delivering at the engine. The system is composed by the fuel tank, the pipes, one or more fuel filters, a fuel pump that could be mechanical or electric and the fuel metering components such as the carburetor or fuel injection system.
- **Fuel tank**

  The fuel tank contains a fuel gauge sending unit, a filler tube and a fuel pump. In most tanks, there is also a fine mesh screen "sock" attached to the pickup tube. This is used to filter out large particles which could easily clog the fuel lines, fuel pump and fuel filter.

  Since the advent of emission controls, tanks are equipped with a control system to prevent fuel vapor from being discharged into the atmosphere. A vent line in the tank is connected to an activated carbon or charcoal filled canister in the engine compartment. Vapors from the tank are stored in this canister, until they can be purged later for combustion in the engine.

Fuel delivery system

- **Fuel pumps**
  - Mechanical pumps are usually found on carbureted engines or where we have a mechanical fuel injection system.
  - Fuel pumps on carbureted engines are usually mounted on the side of the engine block or cylinder head and operated by an eccentric on the engine's camshaft. The rocker arm of the pump rests against the camshaft eccentric, and as the camshaft rotates, it actuates the rocker arm. Some engines use a pushrod between the rocker arm and camshaft eccentric. Inside the fuel pump, the rocker arm is connected to a flexible diaphragm. A spring, mounted underneath, maintains pressure on the diaphragm. As the rocker arm is actuated, it pulls the diaphragm down and then releases it. Once the diaphragm is released, the spring pushes it back up. This continual diaphragm motion causes a partial vacuum and pressure in the space above the diaphragm. The vacuum draws the fuel from the tank and the pressure pushes it toward the carburetor or injection pump. A check valve is used in the pump to prevent fuel from being pumped back into the tank.

Fuel delivery system

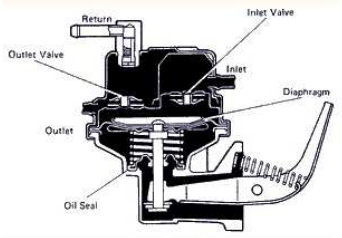

Commom mechanical fuel pump

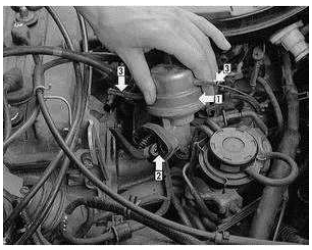

Mechanical pump mounted to the cylinder head

Certain mechanical fuel injection systems also utilize a mechanical fuel pump, typically some early gasoline fuel injection systems. Many of them use a fuel pump essentially identical to the carbureted fuel system's. Some, however, use a vane type fuel pump mounted directly to the injection pump/fuel distributor assembly. The injection pump/fuel distributor assembly is driven by the timing belt, chain or gears which in turn drives the fuel pump. The vanes draw the fuel in through the inlet port then squeeze the fuel into a tight passage. The fuel then exits pressurized through the outlet port.

Fuel delivery system

Electric pumps

There are two general types of electric fuel pumps: the impeller type and the bellows type. Electric pumps can be found on all types of fuel systems.

The impeller type pump uses a vane or impeller that is driven by an electric motor. These pumps are often mounted in the fuel tank, though they are sometimes found below or beside the tank. The vanes or impeller draw the fuel in through the inlet port then squeeze the fuel into a tight passage. This pressurizes the fuel. The pressurized fuel then exits through the outlet port.

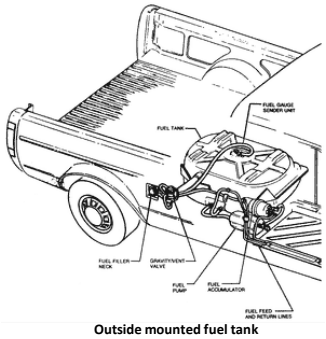

Outside mounted fuel tank

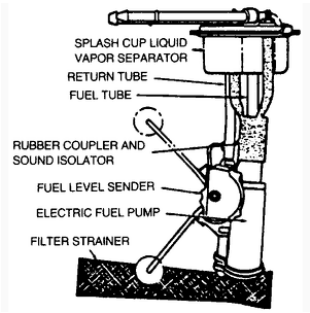

Example of an inside mounted pump

Fuel delivery system

Electric pumps

The bellows type pump is rare. This pump is ordinarily mounted in the engine compartment and contains a flexible metal bellows operated by an electromagnet. As the electromagnet is energized, it pulls the metal bellows up. This draws the fuel from the tank into the pump. When the electromagnet is de-energized, the bellows returns to its original position. A check valve closes to prevent the fuel from returning to the tank. So the fuel to go now is through the outlet port.

Below pump

Fuel delivery system

- **Fuel filters**

In addition to the mesh screen attached to the pickup tube, all fuel systems have at least one other filter located somewhere between the fuel tank and the fuel metering components. On some models, the filter is part of the fuel pump itself, on others, it is located in the fuel line, and still others locate the filter at the carburetor or throttle body inlet.

Inline and spin-on filters

Inline and spin-on filters are located between the fuel pump and fuel metering components. They are connected to fuel lines either by clamps, banjo bolts, flare fittings or quick-disconnect fittings. Most are "throw-away" units with a paper element encased in a housing. Some have a clear plastic housing that allows you to view the amount of dirt trapped in the filter. Some filters consist of a replaceable pleated paper cartridge installed in a permanent filter housing.

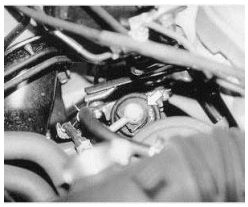

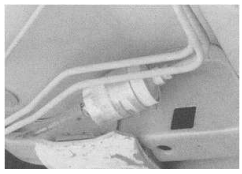

Fuel delivery system

- **Carburetor/Throttle Body Inlet Filters**

Fuel filters can also be located in the carburetor or throttle body inlet.

For carburetors, they consist of a small paper or bronze filter that is installed in the inlet housing. They are extremely simple in design and are about as efficient as an inline type. The bronze filter is the least common and must be installed with the small cone section facing out. One type is held in place by a threaded metal cap that attaches to the fuel line and screws into the carburetor fuel inlet. On another type, the fuel filter threads directly into the carburetor.

On throttle body units, these filters are used as a supplement to the primary inline filter. They usually consist of a conical screen, similar in appearance to an air conditioning orifice tube. They can be accessed after removing the fuel line from the throttle body unit.

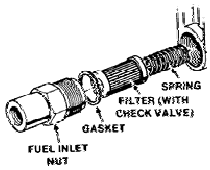

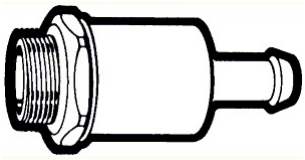

Bronze filter

Fuel injection systems

After the gasoline travel all the way from the tank, passing all the equipment before, it is deliver to the equipment that is responsible from mixing the fuel whit the air, and supplying the fuel to the engine. Along the years this system has change mostly because the demands from the consumer, because does demands was require that the systems progress to better perform principally on ***fuel efficiency*** and ***emissions performance.***

To better understand the evolution of those systems and how they work, all systems will be browse in the follow chapters. Which will be referred:

- How the system works
- Main components of those systems
- Vantages from the previous systems
- Problems existing on the systems
- E.T.C.

Fuel delivery system

- The next schematic represents the different kinds of systems and how they work:

1º	Carburetor	Mechanical System	Indirect injection
2º	Mono Point injection system	Electrical System	
3º	Multipoint injection system		
4º	Multipoint injection system (sequential)		
5º	Multipoint injection system (sequential)		Direct Injection

Carbureted fuel systems

- **General information**

The carburetor is the most complex part of the entire fuel system. Carburetors vary greatly in construction, but they all operate the same way. Their job is to supply the correct mixture of fuel and air to the engine in response to varying conditions.

Despite their complexity, carburetors function because of a simple physical principle, known as the **venturi principle**. The air is drawn into the engine by the pumping action of the pistons. As the air enters the top of the carburetor, it passes through a venturi, which is nothing more than a restriction in the throttle bore. The air speeds up as it passes through the venturi, causing a slight drop in pressure. This pressure drop pulls fuel from the float bowl through a nozzle into the throttle body. It then mixes with the air and forms a fine mist, which is distributed to the cylinders through the intake manifold.

Carbureted fuel systems

The venturi principle in operation

The pumping action of the pistons creates a vacuum which is amplified by the venturi in the carburetor.

This pressure drop will pull fuel from the float bowl through the fuel nozzle. Unfortunately, there is not enough suction present at idle or low speed to make this system work, which is why the carburetor is equipped with an idle and low speed circuit.

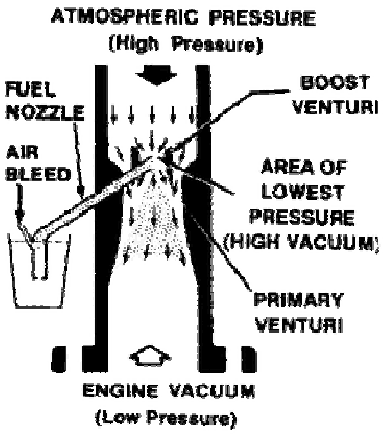

Carbureted fuel systems

There are six different systems (fuel/air circuits) in a carburetor that make it work. The way these systems are arranged in the carburetor determines the carburetor's size and shape:

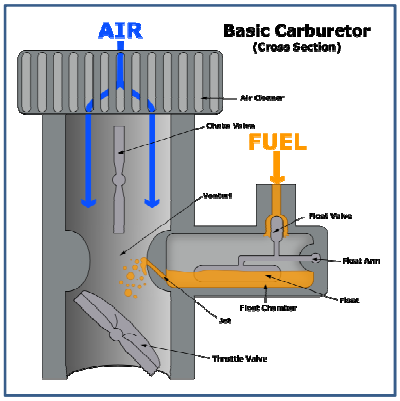

1. Float system
2. Idle and low-speed system
3. Main metering system
4. Power system
5. Accelerator pump system
6. Choke system

Carbureted fuel systems

•**Float system**

The purpose of the float circuit is to maintain an adequate supply of liquid fuel at the proper predetermined level in the bowl for use by the idle, acceleration pump, power and main metering circuits. One or two separate float circuits may be used, each circuit containing a float assembly, needle and a seat. All circuits are supplied with fuel from the fuel bowl.

All fuel enters the fuel bowl through the fuel inlet fitting in the carburetor body. The fuel inlet needle seats directly in the fuel inlet fitting. The fuel inlet needle is controlled by a float and a lever which is hinged by a float shaft.

The fuel inlet system must constantly maintain the specified level of fuel as the basic fuel metering systems are calibrated to deliver the proper mixture only when the fuel is at this level. When the fuel level in the bowl drops, the float also drops permitting additional fuel to flow past the fuel inlet needle into the bowl.

Carbureted fuel systems

- **Float system**

When the fuel pump pushes fuel into the carburetor, it flows through a seat and past a needle which is a kind of shutoff valve. The fuel flows into the float bowl and raises a hinged float so that the float arm pushes the needle into the seat and shuts off the fuel. When the fuel level drops, the float drops and more fuel enters the bowl. In this way, a constant fuel supply is maintained.

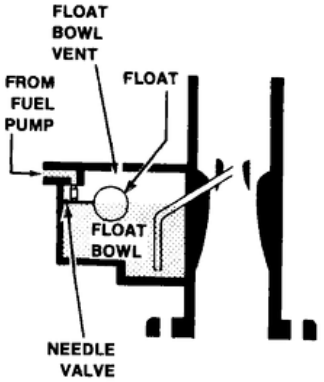

Carbureted fuel systems

- **Idle and low-speed system**

The vacuum in the intake manifold at idle is high because cause the throttle is almost completely closed. This vacuum is used to draw fuel into the engine through the idle system and keep it running. Vacuum acts on the idle jet (usually a calibrated tube that sticks down into the main well, below the fuel level) and sucks the fuel into the engine. The idle mixture screw is there to limit the amount of fuel that can go into the engine.

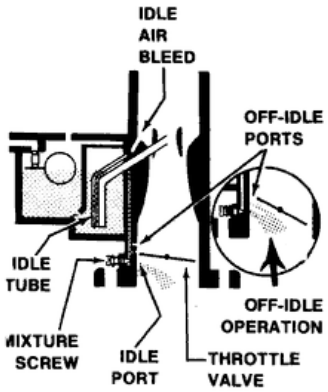

Carbureted fuel systems

•**Main metering system**

May be the simplest system of all, since it is simply the venturi principle in operation. At cruising speeds, the engine sucks enough air to constantly draw fuel through the main fuel nozzle. The main fuel nozzle or jet is calibrated to provide a metering system. The metering system is necessary to prevent an excess amount of fuel flowing into the intake manifold, creating an overly rich mixture.

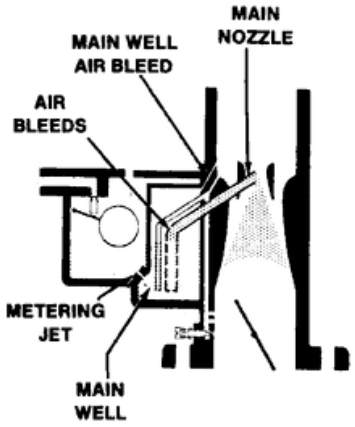

Carbureted fuel systems

•**Power system**

The main metering system works very well at normal engine loads, but when the throttle is in the wide-open position, the engine needs more fuel to prevent detonation and give it full power. The power system provides additional fuel by opening up another passage that leads to the main nozzle. This passageway is controlled by a power valve.

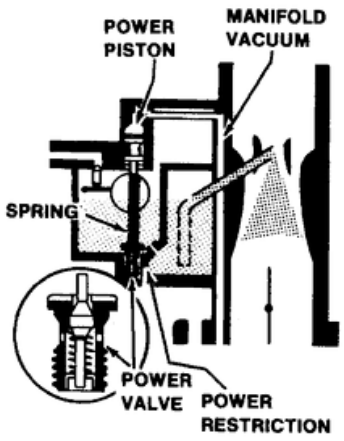

Carbureted fuel systems

•**Accelerator pump system**

When the throttle is opened, the air flowing through the venturi starts flowing faster almost immediately, but there is a lag in the flow of fuel out of the main nozzle. The result is that the engine runs lean and stumbles. It needs an extra shot of fuel just when the throttle is opened. This shot is provided by the accelerator pump, which is nothing more than a little pump operated by the throttle linkage that shoots a squirt of fuel through a separate nozzle into the throat of the carburetor.

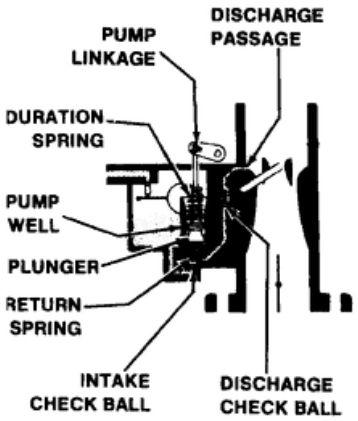

Carbureted fuel systems

•**Choke system**

The choke provides the richer air/fuel mixture required for starting and operating a cold engine. There are manual and automatic chokes.

On carburetors with manual chokes, there is lever or knob in the vehicle which actuates the choke linkage through a cable. Before the car is started, the choke lever is pulled by the driver. Further the lever is pulled, further the choke plate closes. After the vehicle starts and begins to warm up, the driver begins to push the lever back, opening the choke valve. The manual choke system was once the most popular way of controlling the choke plate. However, because of emissions, regulations and the possible danger when used with catalytic converters and technological advances in automatic choke systems, manual chokes are not often used today

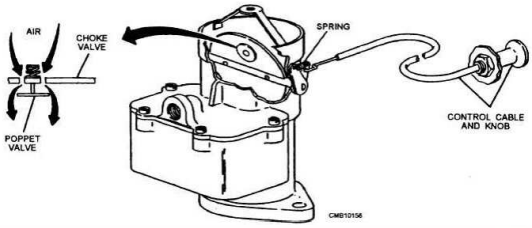

Carbureted fuel systems

•**Choke system**

Automatic chokes have replaced the conventional manual choke. They control the air-fuel ratio for quick starting at low temperature and also provide for the proper amount of choking to enrich the air-fuel mixture for all conditions of engine operation.

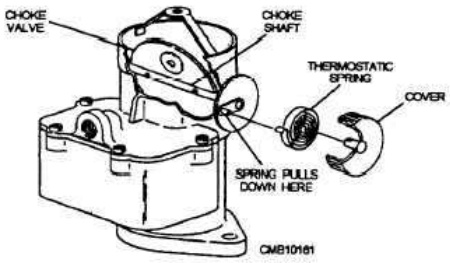

Carbureted fuel systems

The image below shows the carburetor parts.

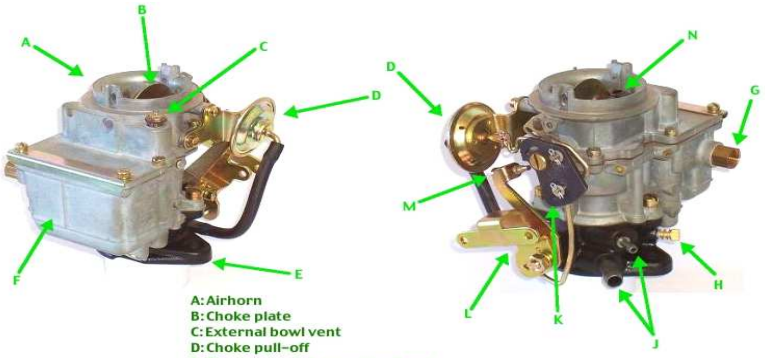

A: Airhorn
B: Choke plate
C: External bowl vent
D: Choke pull-off
E: Throttle body & mounting base
F: Float bowl
G: Fuel inlet
H: Idle mixture adjusting screw
J: Vacuum nipples
K: Fast-idle cam
L: Throttle lever
M: Idle speed adjusting crackscrew
N: Internal bowl vent

Carbureted fuel systems

Carbureted fuel systems

SIAUT - Sistemas Automóveis

Problems existing on the system:

- Maintenance
- Tuning of the Carburetor

Results of those problems:

Because those problems exist in carburetor system, and the air-fuel engine must be strictly controlled under all operating conditions to achieve the engine performance, emissions, drivability and fuel economy desired, it was left behind and was developed the electronic injection system.

Electronic injection system

Advantages of electronic injection system over carburetor:

The precise controls the fuel injection system has over the carburetor allow:

- Improved efficiency;
- Lower emissions of pollutants;

And other advantages are:

- Better atomization of fuel;
- Better flow due the elimination of the venturi of the carburetor;
- Reduced response time to rapid changes in input:

  for example, rapid movements of the accelerator

Electronic injection system

At first, carburetors were replaced with **throttle body fuel injection systems,** also known as **single point** or **central fuel injection** systems. That incorporated electrically controlled fuel-injector valves into the throttle body. Those were almost a bolt-in replacement for the carburetor, so the automakers didn't have to make any drastic changes to their engine designs.

Single point injection System:

Definition: A type of electronic fuel injection system that uses a single injector or pair of injectors mounted in a centrally located throttle body. The throttle unit resembles a carburetor except that there is no fuel bowl float or metering jets. Fuel is sprayed directly into the throttle bore(s) by the injector(s).

Electronic injection system

•**Single point injection System**

With single point injection it is possible to achieve a lambda regulated exhaust emission control using only few components.

Advantages:

- Only one fuel injector
- The system pressure is not dependent on the intake air pressure
- Reduced fuel consumption - precise adaptation of engine changing conditions;
- Improved performance through greater latitude of the intake tract;
- The large distance of heat-stressed parts leads to fewer steam bubbles and a cheaper delivery pump.

Electronic injection system

•**Single point injection System**

Working Principle

The first electronically regulated single point injection dates back to the year 1974 and was developed by GM.
There is only one electromagnetic fuel injector for all four cylinders, injecting fuel intermittently above the throttle valve.
The injection amount is regulated by opening or closing the fuel injector.
Because the supply pressure is low, a simple turbine pump is sufficient instead of a roller vane pump.
The system pressure does not have to be regulated – like with the multipoint injection that we are going to explain later in this presentation – in dependence on negative pressure.
The control unit keeps track of all essential data, speed, load, or temperature of the engine, but as well as the throttle-valve angle and position, or whether the air conditioning is on or off and regulates the amount of fuel injected according to this variables.
The idle-speed operation can be steered or via bypass.

SIAUT - Sistemas Automóveis

Electronic injection system

•**Single point injection System**

1 – Fuel Entrance;
2 – Air intake;
3 – Throttle plate
4 – Admission;
5 – Injector;
6 – Engine;

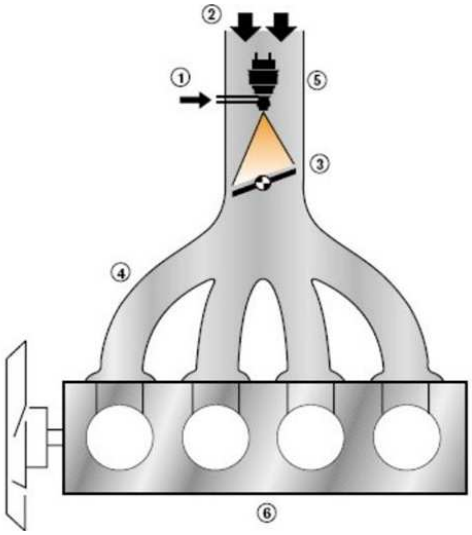

Electronic injection system

•**Single point injection System**

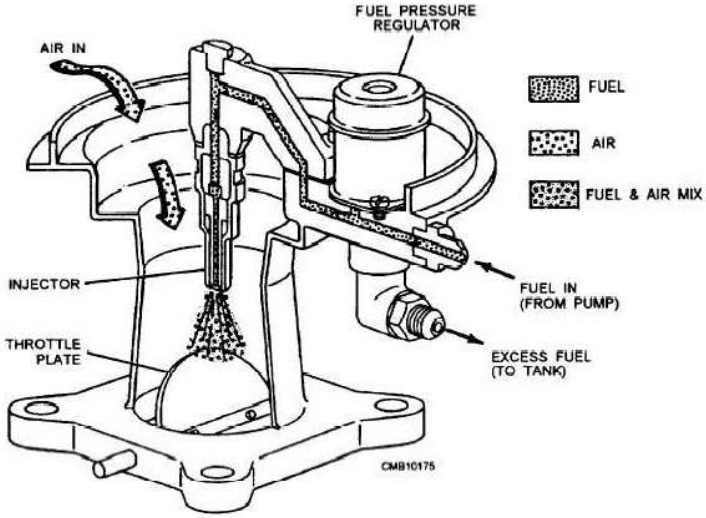

SIAUT - Sistemas Automóveis

Electronic injection system

•**Single point injection System**

Sensors

- Inductive pickup - position of the crankshaft and speed of the engine;
- Lambda probe;
- Temperature sensors for cooling water system and air intake system;
- Throttle potentiometer;

Actuators

- Fuel injector;
- Throttle plate control

Electronic injection system

•**Single point injection System**

Sensors

- Inductive pickup

This sensor gives the ECU the position of the crankshaft, and the engine speed, to calculate the injection time.

This sensor is also use for ignition timing and rpm measurement.

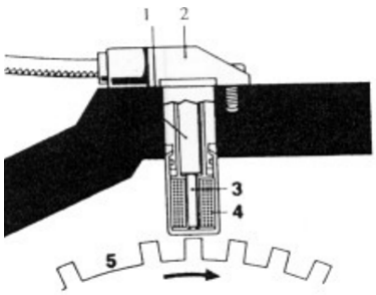

1 – Holder;
2 – Encapsulation;
3 - Permanent magnet;
4 – Inducer;
5 – Cogwheel;

Electronic injection system

•**Single point injection System**

Sensors

➢ Lambda probe

Automotive oxygen sensors, known as O_2 sensors, help determine, in real time, if the air fuel ratio of a combustion engine is richer or lean.
That information is used to reduce vehicle emissions by ensuring that engines burns fuel efficiently and cleanly.

By measuring the proportion of oxygen in the remaining exhaust gas, and by knowing the volume and temperature of the air, entering the cylinders among other things, the ECU can use look-up tables to determine the amount of fuel required to burn at the stoichiometric ratio to ensure the complete combustion.

Electronic injection system

•**Single point injection System**

Sensors

➢ Temperature sensors for cooling water system and air intake system

In this part, there are two important sensors sending information for the ECU. One is the air temperature sensor. This sensor is very important because with the information sent to the ECU is possible to know the air density adjusting the air flow according to that density saving energy and increasing performance.

The other sensor present here is the cooling water sensor, it's responsible to measure the water temperature to know if the engine is cold. If the engine is cold is used an additional injector called cold start injector to inject extra fuel.

Cooling water temperature sensor

Air temperature sensor

Electronic injection system

•**Single point injection System**

Sensors

➢ Throttle potentiometer

The throttle potentiometer indicates the ECU the exact amount of throttle opening at the moment.

A throttle switch is unable to give precise positions of opening, but a throttle pot can give precise openings due to its linear output. The majority of modern engine management systems employ this particular sensor, and like the throttle position switch it is located on the butterfly spindle.

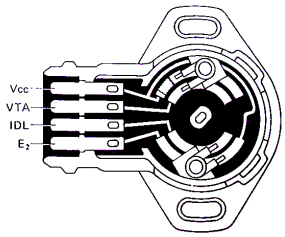

Electronic injection system

•**Single point injection System**

Actuators

➢ Fuel Injector

The fuel injector acts as the fuel-dispensing nozzle. It injects liquid fuel directly into the engine's air stream. The injection is controlled by the ECU. It determines the amount of fuel to injected and in some system if the engine is cold, turns on an "extra" injector which only works while the system is cold. This injector only works for a short period of time determined by the ECU.

Injector

Cold start injector

Electronic injection system

•**Single point injection System**

Actuators

➢Throttle plate control

This is system is used to control the minimum airflow during idle speed. It actuates directly in to the Throttle plate, this is normally done by a small electric motor applied directly to the throttle plate.

SIAUT - Sistemas Automóveis

Electronic injection system

•**Single point injection System**

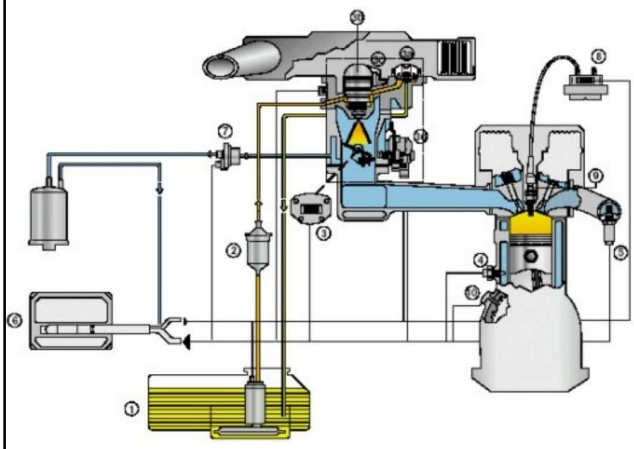

1. Fuel tank whit pump
2. Fuel Filter
3. Throttle potentiometer

3a. Pressure regulator
3b. Fuel injector
3c. Air temperature sensor
3d. Throttle valve actuator

4. Motor temperate sensor
5. Lambda probe
6. ECU
7. Tank vent valve
8. Ignition coil
9. Spark
10. Inductive pickup

SIAUT - Sistemas Automóveis

Electronic injection system

SIAUT - Sistemas Automóveis

•**Single point injection System**

Problems existing on the system:

➢ Because the injection is done in the intake manifold, the timing its still done by the camshaft, so if the driver makes a sudden change the reaction of the injection won't be in real time.
The system would change the amount of fuel but there is a lag. The same happens if the driver does the opposite. If the injection already occur it will still deliver more full than the necessary and make a rich mixture which is not desirable.

➢ Other problem is that the amount of fuel deliver to the cylinder is not the same for all of them. This happens because if a curve is done, one side of the engine would receive more fuel than the other because of the force applied to one of the sides.
In order to optimize this system the multipoint injection was developed.

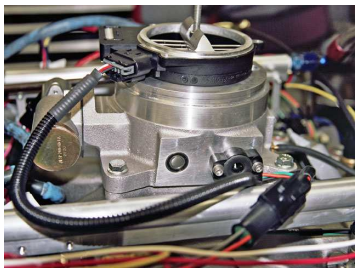

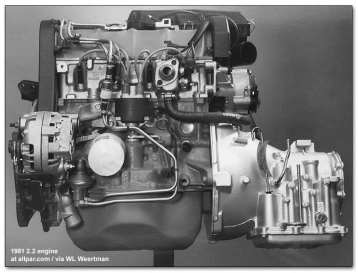

Electronic injection system

SIAUT - Sistemas Automóveis

• **Multipoint Injection System**

In the Multipoint Injection System, we have one injector per cylinder, the injector injects the fuel into the admission valve which admits the fuel and air into the cylinder. This gives an individual control on this cylinder, improving the fuel consumption in relation of the Single point injection.

1. Fuel Rail
2. Air
3. Throttle
4. Intact manifold
5. Injectors
6. Engine

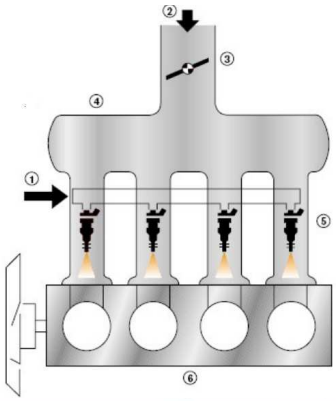

Electronic injection system

- **Multipoint Injection System**

In The first Multipoint injection system, the injection was done at the same time in all injectors. The improvement in relation of the single point is the same amount of Fuel is deliver to all cylinders.

This system only solved one problem, because the problem of lag was still existent, like in the single point injection. So if the injection occur, the fuel and air are in the admission valve, and if driver make a sudden change it only change the fuel in the next admission, so it would be a waste of fuel or insufficient fuel.

To solve this problem it was develop one new system of Multipoint Injection. This system is sequential Multipoint injection system, the layout is the same that the original Multipoint injection system, the difference is that the injection is done individually, in each cylinder.

Electronic injection system

- **Multipoint Injection System**

In this system because we have injection individually and sequential, we don't have the lag problem. Lets suppose that the injection occurs in cylinder 1, then cylinder 3, and suddenly the driver makes a change, in the injection in the cylinder 4 will be done whit the new value. This was the improvement in relation of the first Multipoint injection system.

Sensors

- Inductive pickup - position of the crankshaft and speed of the engine;
- Lambda probe;
- Temperature sensors for cooling water system and air intake system;
- Throttle potentiometer;
- Air-flow meter;

Actuators

- Fuel injector;
- Throttle control or Idle Air Control Valve (IACV)
- Cut-off fuel valve
- EGR Control valve (exhaust gas recirculation)

Electronic injection system

- **Multipoint Injection System**

Some of the sensor were already mention in the single point injection system, some of those have changed for improved ones, to better perform.

In the next slides the new sensors will be referred, and explained.

Sensors that didn't change:

- Inductive pickup - position of the crankshaft and speed of the engine;
- Lambda probe;
- Temperature sensors for cooling water system;

Electronic injection system

- **Multipoint Injection System**

Sensors

- Throttle potentiometer;
- Air-flow meter
- Air temperature sensor

The following scheme contains the 3 sensor referred above:

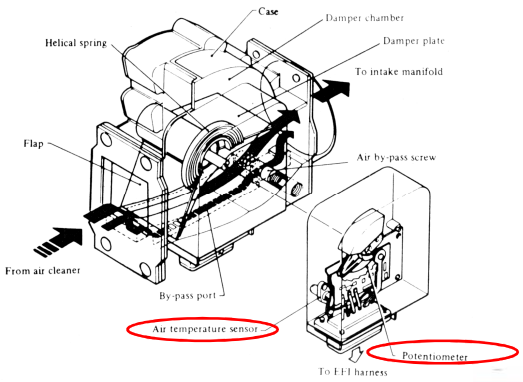

Electronic injection system

- **Multipoint Injection System**

Sensors

➢Throttle potentiometer

As explained before the throttle potentiometer indicates the ECU the exact amount of throttle opening at the moment.

Sensors

➢Air temperature sensor:

As explained before the Air temperature sensor indicates the ECU the temperature of the air that is being admitted to the engine.

Electronic injection system

- **Multipoint Injection System**

Sensors

➢Air-flow meter

An **air flow meter**, commonly abbreviated to **AFM**, also known as an air consumption meter, is a device that measures the amount of air is flowing through a tube. It does not measure the volume of the air passing through the tube, it measures the actual speed of the air flowing through the device in a defined time segment. Its use to measure the quantity of air going into the internal combustion engine.

Electronic injection system

- **Multipoint Injection System**

Actuators

➢Fuel injector

Is the actuator responsible for injection the fuel into the engine, it is controlled by ECU.

The ECU control the amount of time that the injector is open and that way controls the amount of fuel injected

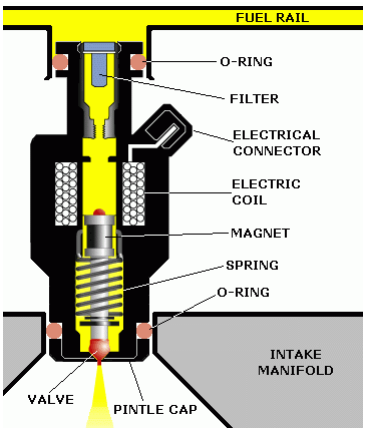

SIAUT - Sistemas Automóveis

Electronic injection system

- **Multipoint Injection System**

Actuators

➢Fuel injector

SIAUT - Sistemas Automóveis

Electronic injection system

- **Multipoint Injection System**

Actuators

➢Fuel Injection

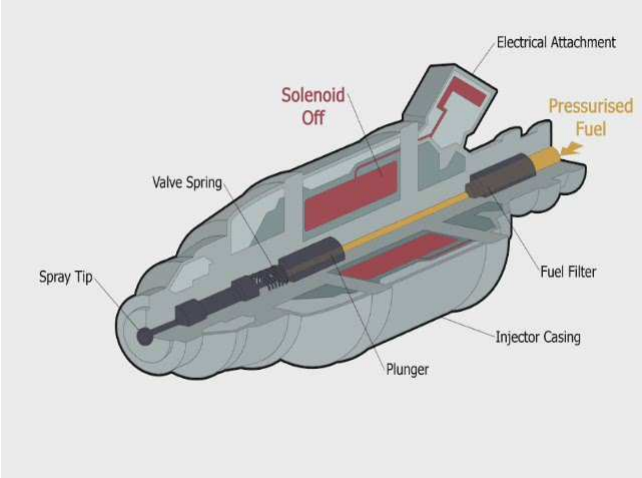

Electronic injection system

- **Multipoint Injection System**

Actuators

➢Throttle control or Air Control Valve (IACV)

This system is used to control the minimum airflow during idle speed.
In multipoint injection system we could have the same system that single point, the Throttle plate control which control the throttle plate to admit more air, or a additional valve called Idle Air Control Valve (IACV) that does a bypass to the main throttle opening, letting more air in, both systems are controlled by the ECU.

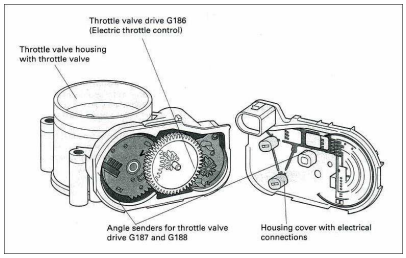

Electronic injection system

- **Multipoint Injection System**

Actuators

➢Cut-off fuel valve

Cut-off fuel valve, as the name says is use to cut-off fuel supply when the engine is not powered.

Electronic injection system

- **Multipoint Injection System**

Actuators

➢EGR Control valve (exhaust gas recirculation)

In internal combustion engines, **exhaust gas recirculation** (**EGR**) is a nitrogen oxide (NOx) emissions reduction technique used in most petrol/gasoline and diesel engines.
EGR works by reticulating a portion of an engine's exhaust gas back to the engine cylinders. In a gasoline engine, this inert exhaust displaces the amount of combustible matter in the cylinder. This means the heat of combustion is less, and the combustion generates the same pressure against the piston at a lower temperature. This is control by the EGR Control valve
A properly operating EGR can theoretically increase the efficiency of gasoline engines via several mechanisms:

- **Reduced throttling losses**
- **Reduced heat rejection**
- **Reduced chemical dissociation**.
- **Reduced specific heat ratio**

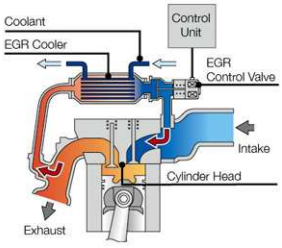

Electronic injection system

- **Multipoint Injection System**

In the Multipoint injection system, there are two ways of deliver the fuel to the injectors, one is by a fuel distributor with individual pipes or tubes to feed each injector and the second possibility that is the mostly use is a fuel rail.

A fuel rail is essentially a pipe (usually resembling a rail) used to deliver fuel to individual fuel injectors. It is designed to have a pocket or seat for each injector as well as an inlet for a fuel supply. Some fuel rails also incorporate an attached fuel pressure regulator.

Electronic injection system

- **Multipoint Injection System**

➢Cold start systems:

In the throttle body injection system, it was a cold start injector, to help the car start when the engine was cold, it injects extra fuel to the intake manifold.

In the Multipoint injection system, there are some different systems to help start the engine in cold temperatures.

•Some older system still have a cold start injector located in the intake manifold.
•Some use a system that circulates water throw the engine head warming the air and fuel before entering the combusting chamber.
•The most common and is the one that is in all new cars whit multipoint injection system, is a system that has a heating structure associated with each fuel injector and includes a main body mounted to a portion of the fuel rail and a heating element mounted with respect to the main body and extending through the fuel rail, into the inlet of the associated fuel injector, and extending into the injector body of the associated fuel injector. This system preheats the fuel to have a better combustion

Electronic injection system

- **Multipoint Injection System**

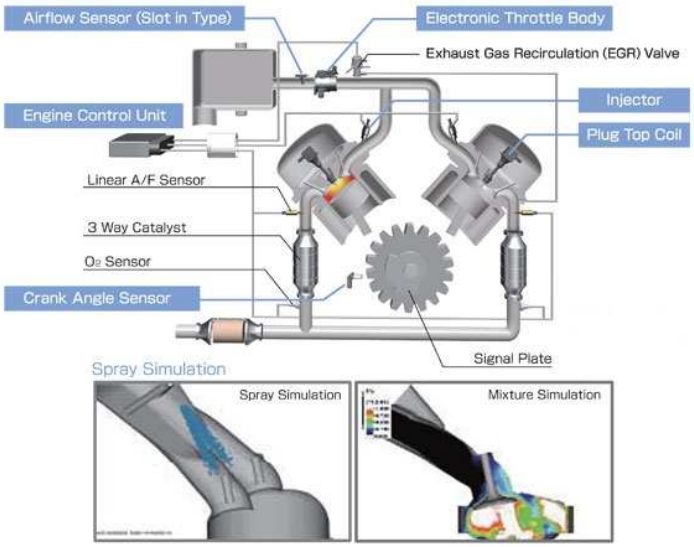

SIAUT - Sistemas Automóveis

Electronic injection system

- **Multipoint Injection System**

[redacted]

SIAUT - Sistemas Automóveis

Electronic injection system

- **Multipoint Injection System**

Problems existing on the system:

➢The problem with this system is that because the injection is done into the admission valve, and when the admission valve open some fuel will not enter the combusting chamber, so there will be some fuel waste, and the timing is still done mechanically by the camshaft.

➢This problems not only exist in this system but also in every single one system that was analyzed before. This is because all of them are systems with indirect injection.

➢Indirect injection has also other problems, like spontaneous ignition that is a very common problem in Electronic injection systems with indirect injection

➢So to overcame this problems, it was develop the Multipoint injection system with direct injection.

Electronic injection system

•**Multipoint injection system with direct injection**

With direct injection, fuel is injected directly into the cylinder during the compression stroke, just a moment before the spark plug ignites the mixture. This was not done earlier because it requires much higher fuel line pressures, over 2,000 pounds per square inch (psi) vs. about 40 psi with conventional fuel injection.

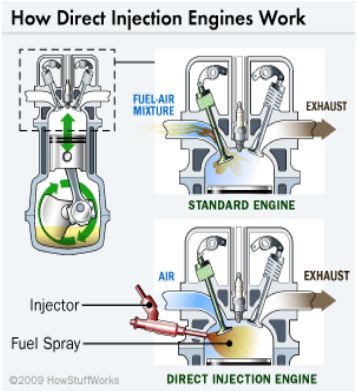

Direct benefits, include a more even fuel-air mixture (with no fuel left behind in the runner or on the back of the valve) and a cooling effect inside the cylinder.

Electronic injection system

•**Multipoint injection system with direct injection**

With a direct injection engine, the fuel gets to skip a step and add a bit of efficiency. Instead of hanging out in the air intake manifold, fuel is squirted directly into the combustion chamber. With an assist from modern engine management computers, the fuel gets burned right where it's needed, when it's needed.

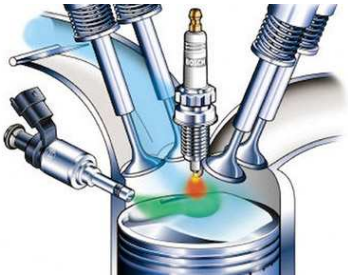

As a result, it's possible to compress the mixture more without risking premature detonation. Compression ratios for direct injected engines tend to be about 12:1 without boost from a turbocharger or supercharger, and about 10:1 with it. In a conventional engine, these numbers would be about 10.5:1 and 8.5:1, respectively.

Electronic injection system

•**Multipoint injection system with direct injection**

Direct Injection Components

A couple of items could de found in every direct injection engine: fuel injectors (at least one per cylinder); and a combustion chamber.

Additionally, depending on what type of direct injection system it belongs to, the engine may or may not feature several other components affiliated with the following systems:

Unit Direct System -- In this setup, the injector and a fuel pump just for that injector are integrated into a single unit and positioned over each cylinder;

Distributor and Inline Pump System -- Either a rotary wheel distributor or plunger-style pump is used to push pressurized fuel to the injectors.

Electronic injection system

•**Multipoint injection system with direct injection**

Direct Injection Components

Common Rail System -- A long metal cylinder called a fuel rail distributes fuel to the injectors under extremely high pressure.

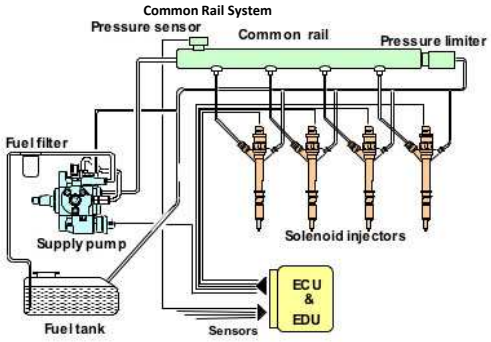

Electronic injection system

•**Multipoint injection system with direct injection**

Advantages:

Combined with ultra-precise computer management, direct injection allows more accurate control over fuel metering (the amount of fuel injected) and injection timing (exactly when the fuel is introduced into the cylinder). The location of the injector also allows for a more optimal spray pattern that breaks the gasoline up into smaller droplets. The result is more complete combustion -- in other words, more of the gasoline is burned, which translates to more power and less pollution from each drop of gasoline.

Electronic injection system

•**Multipoint injection system with direct injection**

Disadvantages:

The primary disadvantages of direct injection engines are complexity and cost. Direct injection systems are more expensive to build because their components must be more rugged -- they handle fuel at significantly higher pressures than indirect injection systems and the injectors themselves must be able to withstand the heat and pressure of combustion inside the cylinder.

Future evolutions:

There are one new system in study to improve the injection system.

That system is **Vaporized Fuel Injection System (VFIS)**

- 87% energy is dissipated or wasted in the form of heat, drive train loss, and idling loss.
- Among these energy loss, 62% loss is mainly **heat loss**.
- Because engine inefficiency is mainly due to incomplete combustion and heat dissipation, more focus is required to improve complete combustion and to recover wasted heat energy to perform useful work.

To help explain how to improve complete combustion, let's assume that the same amount of gasoline fuel being exposed to the same required amount of air, it is obvious that gasoline fuel being atomized with injector burns much more efficient than gasoline fuel in liquid state due to increased surface area for combustion reaction with oxygen; for the same reason, gasoline fuel being vaporized using heat in combustion chamber such as direct injection will burn more efficient than atomized gasoline fuel for the fact that gasoline fuel is vaporized to its smallest molecular size, namely, maximum surface area achieved, for combustion reaction with oxygen.

Future evolutions:

Vaporized Fuel Injection System (VFIS)

➢However, there are still several disadvantages that affect the thermal efficiency of direct-injection gasoline engine as stated below:

•At exhaust stroke, tremendous heat energy is inevitably expelled out of combustion chamber to exhaust system while exhaust valve opens.

•Inflow of cold air at intake stroke, especially in winter, lowers temperature of combustion chamber, resulting in incomplete vaporization of gasoline for combustion and power loss.

•Injection of gasoline fuel into combustion chamber at intake stroke cannot ensure gasoline fuel, especially those with high number of carbon chains, being vaporized completely and mixed with air rapidly for efficient combustion.

SIAUT - Sistemas Automóveis

Future evolutions:

Vaporized Fuel Injection System (VFIS)

➢So what is the purpose of vaporizing gasoline in vaporization chamber EXTERNALLY? There are many advantages of doing so:

•Recovers heat loss partially and puts it back to the combustion system so that temperature inside combustion chamber can be optimally for efficient combustion.

•Inflow of cold air into combustion chamber causes temperature drop that results in incomplete combustion. VFIS can be programmed, based on temperature of air, to heat gasoline fuel to higher temperature to compensate heat loss so that high-temperature vaporized gasoline fuel, when mixed with cold will constantly maintain desired temperature of combustion chamber to be the same or above as needed.

•Since vaporization process occurs in vaporization chamber, unlike direct injection in combustion chamber, gasoline fuel absorbs/recovers a large amount of heat energy from radiator/exhaust pipe via heat exchanger. More heat energy will be released after combustion to deliver a powerful stroke to drive the piston downward.

It ensures gasoline fuel being vaporized completely before gasoline fuel is injected into combustion chamber, and being mixed with air rapidly before combustion.

SIAUT - Sistemas Automóveis

Future evolutions:

Vaporized Fuel Injection System (VFIS)

VFIS SYSTEM INJECTS PRECISE AMOUNT OF 100% VAPORIZED FUEL INTO COMBUSTION CHAMBER AT A PRECISE TIME AND AT AN APPROPRIATELY-SELECTED, AND OPTIMAL HIGH TEMPERATURE/PRESSURE TO AVOID PRE-IGNITING FUEL (i.e. DETONATION) AND PRODUCING NITROGEN OXIDE (NOx), and fuel combustion process will then be complete with no un-burnt hydrocarbon left behind.
Therefore, power output will be maximized and air pollution will be minimized.
More importantly, VFIS system utilizes wasted heat energy to vaporize fuel, and heat being added to the fuel vaporization chamber will effectively increase the internal energy of fuel so that heat release increases, so does the pressure of the gas mixture, during combustion to drive the piston in the cylinder downward. As a result, fuel efficiency will be substantially increased.

SIAUT - Sistemas Automóveis

Future evolutions:

Vaporized Fuel Injection System (VFIS)

How does VFIS injection system work?

VFIS injection system works very similar to direct gasoline injection that uses combustion chamber as an INTERNAL vaporization chamber to promote about 97% vaporization of gasoline that it claims for combustion;
while VFIS injection system employs an EXTERNAL vaporization chamber to promote 100% COMPLETE fuel vaporization for combustion and, more importantly, RE-UTILIZATION of waste energy, a feature that direct gasoline injection can not achieved, boosts more fuel saving than that achieved by direct gasoline injection and Vapor Fuel System that allows engine to run at an incredibly lean 20:1 air fuel ratio.

SIAUT - Sistemas Automóveis

Future evolutions:

Vaporized Fuel Injection System (VFIS)

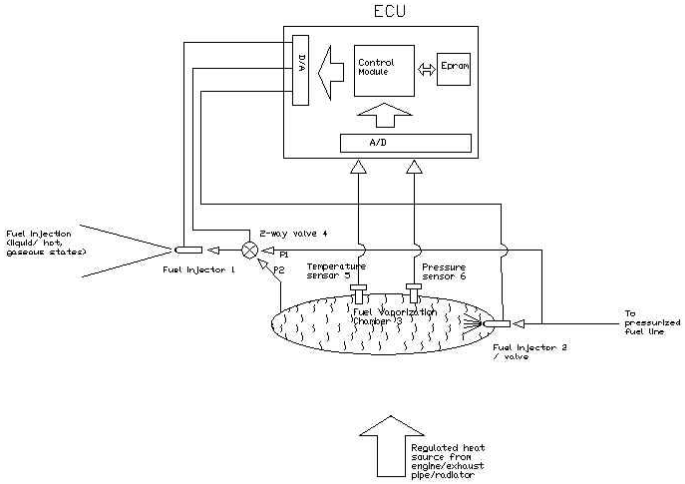

Fig. 1 Vaporized Fuel Injection System

SIAUT - Sistemas Automóveis